Page 6-2

VFNC3 ULTRA-COMPACT TYPE

- Single-phase 200-240VAC supply
- Three-phase motor power, 0.2 to 2.2kW / 0.25 to 3HP ratings at 230VAC
- Compliant with IEC/EN 61800-3 standards, first environment cat. C1, without external suppressors
- Optional three-phase motor inductances.

Page 6-3

VFS11 TYPE

- Three-phase 380-500VAC supply
- Three-phase motor power, 0.4 to 15kW / 0.54 to 20HP ratings at 400VAC
- Compliant with standards IEC/EN 61800-3, first environment cat C2 or second environment cat. C3, without external suppressors
- Integrated dynamic tracking circuit
- Optional three-phase motor inductances
- Optional braking resistors.

Page 6-4

VFPS1 TYPE

- Three-phase 380-480VAC supply
- Three-phase motor power 18.5 to 630kW / 25 to 1000HP ratings at 400VAC
- Compliant with standards IEC/EN 61800-3, first environment cat. C2 or second environment cat. C3, without external suppressors
- Integrated dynamic braking circuit up to 220kW
- Optional three-phase motor inductances
- Optional braking resistors.

Description		VFNC3 1-phase	VFS11 3-phase	VFPS1 3-phase
Method of control				
	Constant torque V/f	●	●	●
	Sensorless vector	●	●	●
	Automatic torque boost	●	●	●
	Variable torque (for pump and fan)	●	●	●
	Energy saving	●	●	●
	Vector with encoder feedback			●
Maximum output frequency				
	400Hz	●	●	
	500Hz			●
Overload				
	150% for 60s	●	●	
	120% for 60s (up to 90kW); 110% for 60s (over 90kW)			●
Serial communications				
	TTL/RS232		●	
	n° 1 RS485	●		
	n° 2 RS485			●
Protocols				
	Toshiba, Modbus®	●		
	Toshiba, Modbus®, PROFIBUS		●	●
Digital inputs		●	●	●
Digital outputs		●	●	●
Analog inputs		●	●	●
Analog outputs		●	●	●
Onboard potentiometer		●	●	
Auto-tuning		●	●	●
SLEEP function		●	●	●
FIRE function				●
Frequency potentiometer		●	●	●
3-wire motor running		●	●	●
PID adjustment		●	●	●
DC braking		●	●	●
Built-in braking circuit			●	●
Preset speed frequency (n°15)		●	●	●
Pump and fan functions		●	●	●
Auto-speed adjustment		●	●	●
Motor PTC thermistor input			●	●
Safety stop per EN ISO 13849-1 cat. 3				●

- Versions for single-phase up to 2.2kW / 3HP and three-phase up to 630kW / 1000HP
- Special function for pump and fan control using PID algorithm
- Active earth leakage protection
- EMC suppressor built in all versions
- Selectable motor control mode: V/f, vector, energy saving
- Selectable digital and analog input and output functions
- IEC IP55 version available on request
- HVAC version, compliant with IEC/EN 61000-3-12 standards, available on request.

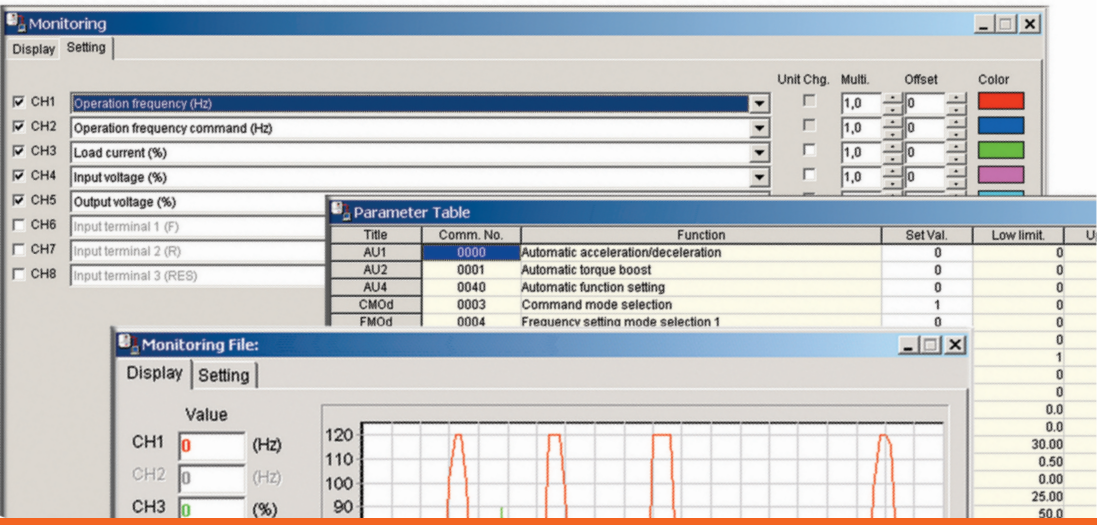

Lovato electric

VFNC3 single-phase ultra-compact type

VFNC3...

Order code	Ie ❶	3-phase motor power at 230V		Qty per pkg	Weight
	[A]	[kW]	[HP]	n°	[kg]
Single-phase supply 200-240VAC 50/60Hz. EMC suppressor built in.					
VFNC3S 2002PL W	1.4	0.2	0.25	1	0.900
VFNC3S 2004PL W	2.4	0.4	0.54	1	1.000
VFNC3S 2007PL W	4.2	0.75	1	1	1.300
VFNC3S 2015PL W	7.5	1.5	2	1	2.000
VFNC3S 2022PL W	10	2.2	3	1	2.000

❶ Operation up to 50°C without derating.

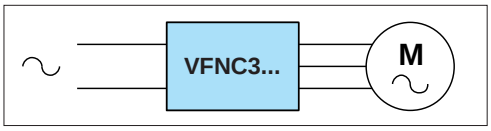

Side-by-Side installation
Multiple units installed without side clearance for space saving

Traditional model

General characteristics
VFNC3 is an ultra-compact motor drive with high performance and extremely reliable (printed circuit surface protection per IEC/EN 60721-3-3).
Easily installed, VFNC3 is equipped with a front display and innovative jog dial control, which simplifies the programming and control pocesses of the drive and motor. The on-board RS485 interface permits and overall remote control (supervision and communication protocols). VFNC3 can be used in simple applications such as extractor fans, ventilators, conveyor belts, machine tools, car washes, fitness equipment, but also in applications of intermediate complexity, such as pumps, waterworks.
The vector control and the possibility to enabble the motor auto-tuning warrants efficiency and high torques even with very low operating frequencies.

SPEED REFERENCE SIGNALS
Reference signals for speed adjustment are obtained by:
- Front jog dial control (potentiometer)
- External potentiometer: 1-10kΩ
- Voltage signal: 0-10V
- Current signal: 4-20mA
- Remote keypad option
- 15 preset speeds via digital inputs
- RS485 serial signals.

PROGRAMMABLE INPUTS
- Selectable PNP or NPN I/O logic
- 4 digital multifunction inputs
- 1 digital configurable as analog input.

PROGRAMMABLE OUTPUTS
- 1 relay with changeover contact
- 1 static configurable as analog 0-10V/4-20mA.

PROTECTIONS
- Overcurrent and overvoltage
- Input phase loss
- Output phase loss
- Motor drive overload
- Motor overload
- Output short circuit
- Motor stall.

SPECIAL FUNCTIONS
- PID function for pump and fan application
- Dual set of independent parameters and ramps for two different motor controls
- Automatic restarting and instantaneous speed tuning
- 15 viewable frequency values
- Start-up DC injection
- DC injection braking
- Motor control: constant torque V/f, sensorless vector, variabile torque.

Operational characteristics
- Input voltage: 200-240VAC single-phase
- Output voltage: ≤ input voltage
- Rated operational current: 1.4-10A
- Mains voltage: 50/60Hz
- Output frequency: 0.1-400Hz
- Frequency modulation: 2-16kHz
- Current overload: 150% for 60s
- IEC degree of protection: IP20
- Ambient conditions
  - Operating temperature: -10...+60°C
  - Maximum altitude: 3000m (with derating)
  - Relative humidity: 5-95% (with no condensing).

Certifications and compliance
Certifications obtained: UL Listed for USA and Canada (File E204788) as Power Conversion Equipment; CSA certified for Canada (File 231252) as Motor Controllers - Miscellaneous.
Compliant with standards: IEC/EN 61800-5-1, IEC/EN 61800-3 - first environment cat. C1, IEC/EN 60721-3-3, UL508, CSA C22.2 n° 14.

Accessories page 6-5
Dimensions page 6-6

VFS11 type three-phase

VFS11...

Order code	Ie ❶	3-phase motor power at 400V		Qty per pkg	Weight
	[A]	[kW]	[HP]	n°	[kg]
Three-phase supply 380-500VAC 50/60Hz.❷ EMC suppressor built in.					
VFS11 4004PL WP	1.5	0.4	0.54	1	2.100
VFS11 4007PL WP	2.3	0.75	1	1	2.100
VFS11 4015PL WP	4.1	1.5	2	1	2.200
VFS11 4022PL WP	5.5	2.2	3	1	3.100
VFS11 4037PL WP	9.5	4.0	5	1	3.200
VFS11 4055PL WP	14.3	5.5	7.5	1	5.900
VFS11 4075PL WP	17	7.5	10	1	6.700
VFS11 4110PL WP	27.7	11	15	1	11.000
VFS11 4150PL WP	33	15	20	1	11.500

❶ Operation up to 50°C without derating.
❷ 200-240VAC three-phase version available on request; consult Customer Service for information; see contact details on inside front cover.

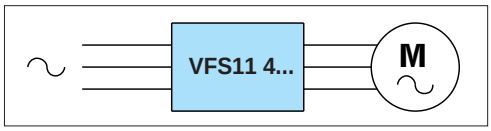

"Side by Side" installation
Multiple units installed without side clearance for space saving

Traditional model

General characteristics
The innumerous functions available together with the constructive features consent the new VFS11 speed control to be used in a host of industrial and civil sectors, such as: waterworks and methane piping ducts, cement, paper, chemical and petrochemical industries.
The precise design of the front panel board and the configuration menus warrant easy and user-friendly commissioning of the motor drive.

SPEED REFERENCE SIGNALS
Reference signals for speed adjustment are obtained by:
- Front potentiometer
- External potentiometer: 1-10kΩ
- Voltage signal: 0-10V
- Current signal: 4-20mA
- Keypad on front
- Remote keypad option
- 15 preset speeds via digital inputs
- TTL serial signal (TOSHIBA-Modbus®-RTU)

PROGRAMMABLE INPUTS
- Selectable PNP or NPN I/O logic
- 6 digital multifunction inputs
- 2 digital configurable as analog input.

PROGRAMMABLE OUTPUTS
- 1 relay with changeover contact; 1 relay with NO contact; 1 transistor; 1 analog configurable as 0-10VDC or 4-20mA.

PROTECTIONS
- Overcurrent and overvoltage
- Input and output phase loss
- Drive, motor and braking resistor overload
- Drive overtemperature and excessive torque
- Earth/ground fault.

SPECIAL FUNCTIONS
- PID function for pump and fan application
- Dual set of independent parameters and ramps for two different motor controls
- Automatic restarting and instantaneous speed tuning
- 15 viewable frequency values
- DC-Bus access for DC power supply
- Capacitor pre-charge circuit
- Integrated dynamic braking circuit; optional external braking resistor
- Motor control: constant torque V/f, variable torque, sensorless vector
- Automatic motor torque boost control
- Regenerative energy control
- DC injection braking
- Auto-tuning
- Frequency potentiometer (speed adjustment via 2 external pushbuttons)
- Quick parameter search and programming
- Sequential starting control for sets of motors
- SLEEP function: automatic motor stopping after continuous running at minimum frequency
- Start-up DC injection
- OVERRIDE function for summing analog VIA-VIB inputs.

Operational characteristics
- Input voltage:
  - VFS11... 380-500VAC three-phase
- Output voltage: ≤ input voltage
- Rated operational current Ie:
  - VFS11... 1.5-33A three-phase
- Mains voltage: 50/60Hz
- Output frequency: 0-500Hz
- Frequency modulation: 2-16kHz
- Current overload: 150% for 60s; 200% for 0.5s
- Low speed torque: 150% 1Hz
- IEC degree of protection: IP20; IP55 on request
- Ambient conditions
  - Operating temperature: -10...+60°C
  - Maximum altitude: 1000m
  - Relative humidity: 20-93% (with no condensing).

Certifications and complience
Certifications obtained: UL Listed for USA and Canada (File E204788) as Power Conversion Equipment; CSA certified for Canada (File 231252) as Motor Controllers - Miscellaneous; AS C-tick.
Compliant with standards: EN 50178, IEC/EN 61800-3 - first environment cat. C2 or second environment cat. C3, UL508, CSA C22.2 n° 14.

Accessories page 6-5
Dimensions page 6-6

VFPS1
three-phase type

VFPS1...

Order code	Ie ❶	3-phase motor power at 400V		Qty per pkg	Weight
	[A]	[kW]	[HP]	n°	[kg]
Three-phase supply ❷. EMC suppressor built in.					
VFPS1 4185PL WP	41	18.5	25	1	22.200
VFPS1 4220PL WP	48	22	30	1	23.700
VFPS1 4300PL WP	66	30	40	1	32.500
VFPS1 4370PL WP	79	37	50	1	32.800
VFPS1 4450PL WP	94	45	60	1	54.000
VFPS1 4550PL WP	116	55	75	1	54.000
VFPS1 4750PL WP	160	75	100	1	54.000
VFPS1 4900PC WP	179	90	125	1	100.000
VFPS1 4110KPC WP	215	110	150	1	100.000
VFPS1 4132KPC WP	259	132	200	1	108.000
VFPS1 4160KPC WP	314	160	250	1	118.000
VFPS1 4220KPC WP	427	220	350	1	161.000
VFPS1 4250KPC WP	481	250	400	1	194.000
VFPS1 4280KPC WP	550	280	450	1	204.000
VFPS1 4315KPC WP	616	315	500	1	204.000
VFPS1 4400KPC WP	759	400	600	1	302.000
VFPS1 4500KPC WP	941	500	700	1	320.000
VFPS1 4630KPC WP	1181	630	1000	1	462.000

❶ Operation up to 50°C without derating.
❷ Three-phase supply voltage 380...480VAC 50/60Hz for 18.5 to 110kW types.
Three-phase supply voltage 380...440VAC 50Hz / 380...480VAC 60Hz for 132 to 630kW types.

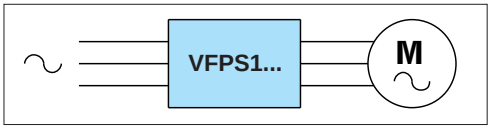

General characteristics
VFPS1 is a motor drive combining the most advanced and optimised mode for energy saving with a new more-compact and complete line as well as a new function software dedicated to pump and fan applications.
The on-board EMC surge suppressor and standard-supplied (up to 315kW type) DC inductance consent to radically reduce harmonic distortions and noise disturbances generated by the motor drive and to limit the input current to a maximum value of 1.1 times output current.
QUICK mode provides for a customised menu of 32 specific parameters for a single application, inhibiting access to all the other parameters.

SPEED REFERENCE SIGNALS
Reference signals for speed adjustment are obtained by:
– External potentiometer: 1-10kΩ
– Voltage signal: 0-10V or -10 to +10V
– Current signal: 4-20mA or 0-20mA
– Keypad on front
– Remote keypad option
– 15 preset speeds via digital inputs
– RS485 serial signals.

PROGRAMMABLE INPUTS
– Selectable PNP or NPN I/O logic
– 6 digital multifunction inputs
– 1 digital configurable as analog input.

PROGRAMMABLE OUTPUTS
– 1 relay with changeover contact
– 2 static
– 2 analog configurable as 0-10VDC, 0-20mA or 4-20mA
– 1 pulse train.

PROTECTIONS
– Overcurrent and overvoltage
– Output short circuit and earth leakage
– Drive, motor and braking resistor overload
– Drive overtemperature
– Motor stall
– Too low torque.

SPECIAL FUNCTIONS
– PID function for pump and fan application
– Dual set of independent parameters and ramps for two different motor controls
– Automatic restarting and instantaneous speed tuning
– 15 viewable frequency values
– DC-Bus access for DC power supply
– Built-in DC reactor for reduced harmonic content at input
– DC braking board standard-supplied up to 220kW/350HP rating; optional external braking resistors
– DC injection at starting
– Motor control: constant torque V/f, variable torque, torque boost with automatic starting, sensorless vector, vector control in closed-loop conditions
– Auto-tuning
– Frequency potentiometer; speed adjustment via 2 external push buttons
– SLEEP function: automatic motor stopping after continuous running at minimum frequency
– FIRE control function: specified speed maintained even in alarm conditions
– Built-in PTC thermistor input.

Operational characteristics
– Output voltage: ≤ input voltage
– Rated operational current Ie: 41 to 1181A
– Mains voltage: 50/60Hz ±5%
– Output frequency: 0.5-500Hz
– Frequency modulation: 1-16kHz
– Current overload: 120% for 60s, 135% for 2s
– IEC degree of protection: IP00 for all except VFPS1 4185PL WP with IP20; IP55 on request
– Ambient conditions:
  • Operating temperature: -10...+60°C
  • Maximum altitude: 1000m without derating; up to 3000m with derating
  • Relative humidity: 20-93% (with no condensing).

Certifications and compliance
Certifications obtained: UL Listed for USA and Canada (File E204788) as Power Conversion Equipment; CSA certified for Canada (File 231252) as Motor Controllers - Miscellaneous; AS C-tick.
Compliant with standards: IEC/EN 61800-5-1, IEC/EN 61800-3 - first environment cat. C2 or second environment cat. C3, UL508, CSA C22.2 n° 14.

Accessories

IND...

ROF...
ROPPE...

Order code	Ie	mH	For motor drive rating❶		Qty per pkg	Weight
	[A]		[kW]	[HP]	n°	[kg]
Three-phase inductances.						
IND2020	12	1	0.75-4	1-5	1	1.800
IND2030	25	0.6	5.5-11	7.5-15	1	2.700
IND3040	50	0.2	15-22	20-30	1	7.200
IND4040	100	0.15	30-45	40-60	1	14.500
IND4075	150	0.08	55-75	75-100	1	22.000
IND4090	300	0.04	90-110	125-150	1	27.000
IND5060	400	0.03	132-160	200-250	1	38.000
IND5080	600	0.02	220-250	350-400	1	45.000
IND7070	800	0.016	280-315	450-500	1	62.000

Order code	Power	Capacity	Qty per pkg	Weight
	[W]	[Ω]	n°	[kg]
Braking resistors.				
ROF20100	200	100	1	0.220
ROF20150	200	150	1	0.220
ROF35060	350	60	1	0.510
ROF50035	500	35	1	0.620
ROF80030	800	30	1	1.400
ROPPE11430	1300	30	1	4.000
ROPPE12515	2200	15	1	5.000
ROPPE14008	4000	8	1	7.000
ROPPE24003	8000	3	1	11.000

Order code	Description	Qty per pkg	Weight
		n°	[kg]
Other accessories.			
MITOSVT6	Remote control panel with functions: motor running, inverse rotation, speed adjustment and quantities control. IP65. Cable excluded ❷	1	0.154
RKP002Z	Remote control panel with functions: motor running, speed adjustment, quantities control and parameter setting. IP20. Cable excluded ❷	1	0.070
USB001Z	Motor drive programming module ❷❸❹	1	0.260
RJ45SH05000	Connecting cable RJ45 for MITOS..., RKP002Z or USB001Z to motor drive. 5m long	1	0.142
51 PT25H101K	1kOhm potentiometer 10 turns, complete with operating knob	1	0.100
51 PT35H11K	1kOhm potentiometer 1 turn, complete with operating knob	1	0.052
MITOSVT6ECO	Remote control panel for quantities retention and control of a system (PID: pressure, temperature, etc). IP65. Cable excluded ❷	1	0.134

❶ For other drive ratings, consult Customer Service; see contact details on inside front cover.
❷ RJ45 cable to be purchased separately; order code RJ45SH05000.
❸ For USB001Z module → PC USB port connection, use a normal USB cable, USB1.1/2.0 compatible, type A-B connection, maximum recommendable length 1m only.
❹ Consult Customer Service request the motor drive remote control software; see contact details on inside front cover.

General characteristics for IND...
The three-phase inductances, IND type, can be connected to the drives type VFNC3..., VFS11... and VFPS1... in the following ways:
– On the motor drive input to reduce the harmonic content upstream, with the subsequent reduction of input current consumption of the drive itself.
– On the motor drive output to limit peak voltages generated by drives on the motor or in case there are more motors connected in parallel, controlled simultaneously by the drive itself.
The inductances can be used at the motor drive input having single-phase power supply.
For the correct choice, select the inductance with Ie current rating equal to or greater than the rated current of the drive they will be used with.

Operational characteristics for IND...
– Class: H
– Current: 12-800A
– Ambient conditions:
  • Operating temperature: -25...+100°C.

Reference standards for IND...
Compliant with standards: IEC/EN 61558-1.

Operational characteristics for ROF... and ROPPE...
– Maximum applicable voltage: 1000V
– Connection: With 250mm cable for ROF; directly on the resistor terminal for ROPPE
– Degree of protection: IP54 for ROF; IP20 for ROPPE.

Drive type	Resistor type
VFS11 4004PL WP	ROF20150
VFS11 4007PL WP	ROF20150
VFS11 4015PL WP	ROF20100
VFS11 4022PL WP	ROF20100
VFS11 4037PL WP	ROF35060
VFS11 4055PL WP	ROF35060
VFS11 4075PL WP	ROF50035
VFS11 4110PL WP	ROF80030
VFS11 4150PL WP	ROF80030
VFPS1 4185PL WP	ROPPE11430
VFPS1 4220PL WP	ROPPE12515
VFPS1 4300PL WP	ROPPE12515
VFPS1 4370PL WP	ROPPE14008
VFPS1 4450PL WP	ROPPE14008
VFPS1 4550PL WP	ROPPE14008
VFPS1 4750PL WP	ROPPE14008
VFPS1 4900PL WP	ROPPE24003
VFPS1 4110KPC WP	ROPPE24003
VFPS1 4132KPC WP	ROPPE24003
VFPS1 4160KPC WP	ROPPE24003
VFPS1 4220KPC WP	ROPPE24003
VFPS1 4250KPC WP	❺
VFPS1 4280KPC WP	❺
VFPS1 4315KPC WP	❺
VFPS1 4400KPC WP	❺
VFPS1 4500KPC WP	❺
VFPS1 4630KPC WP	❺

❺ For details and choice on braking resistors, consult Customer Service; see contact details on inside front cover.

Motor drive

VFNC3S 2002PL W - VFNC3S 2007PL W

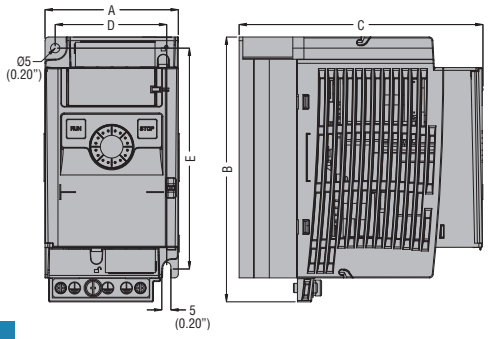

TYPE	A	B	C	D	E
VFNC3S 2002PL W	72 (2.83")	143 (5.63")	102 (4.01")	60 (2.36")	131 (5.16")
VFNC3S 2004PL W	72 (2.83")	143 (5.63")	121 (4.76")	60 (2.36")	118 (4.64")
VFNC3S 2007PL W	72 (2.83")	143 (5.63")	131 (5.16")	60 (2.36")	118 (4.64")

VFNC3S 2015PL W - VFNC3S 2022PL W

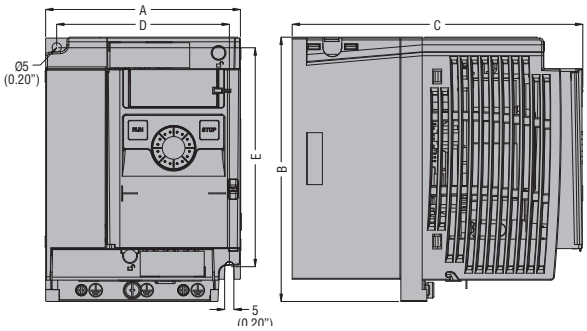

TYPE	A	B	C	D	E
VFNC3S 2015PL W	105 (4.13")	142 (5,59")	156 (6.14")	93 (3.66")	118 (4.64")
VFNC3S 2022PL W	105 (4.13")	142 (5,59")	156 (6.14")	93 (3.66")	118 (4.64")

VFS11 4004PL WP - VFS11 4037PL WP

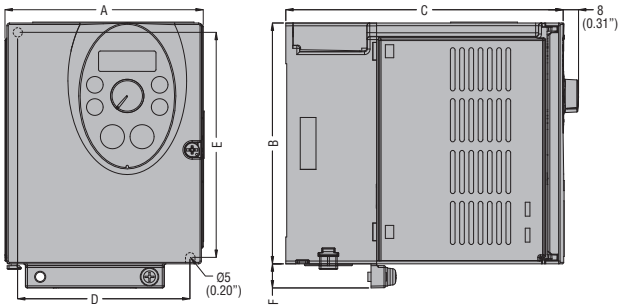

TYPE	A	B	C	D	E	F
VFS11 4004PL WP	105 (4.13")	130 (5.11")	150 (5.90")	93 (3.66")	121.5 (4.78")	13 (0.51")
VFS11 4007PL WP	105 (4.13")	130 (5.11")	150 (5.90")	93 (3.66")	121.5 (4.78")	13 (0.51")
VFS11 4015PL WP	105 (4.13")	130 (5.11")	150 (5.90")	93 (3.66")	121.5 (4.78")	13 (0.51")
VFS11 4022PL WP	140 (5.51")	170 (6.69")	150 (5.90")	126 (4.96")	157 (6.18")	14 (0.55")
VFS11 4037PL WP	140 (5.51")	170 (6.69")	150 (5.90")	126 (4.96")	157 (6.18")	14 (0.55")

VFS11 4055PL WP - VFS11 4150PL WP

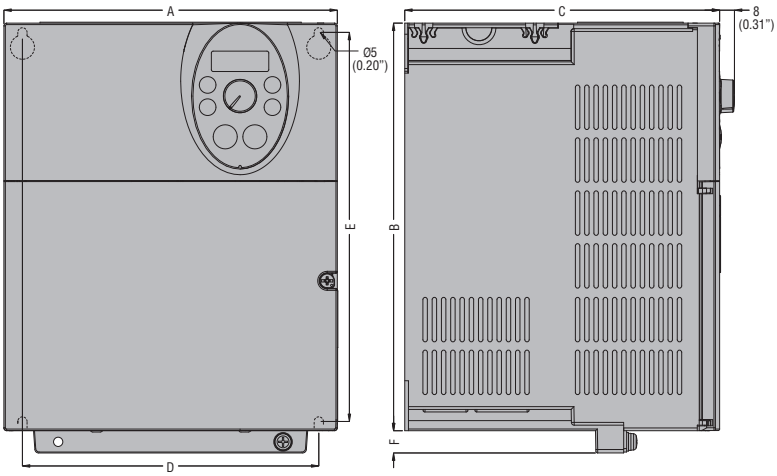

TYPE	A	B	C	D	E	F
VFS11 4055PL WP	180 (7.09")	220 (8.66")	170 (6.69")	160 (6.30")	210 (8.27")	12 (0.47")
VFS11 4075PL WP	180 (7.09")	220 (8.66")	170 (6.69")	160 (6.30")	210 (8.27")	12 (0.47")
VFS11 4110PL WP	245 (9.64")	310 (12.20")	190 (7.48")	225 (8.86")	295 (11.61")	19.5 (0.77")
VFS11 4150PL WP	245 (9.64")	310 (12.20")	190 (7.48")	225 (8.86")	295 (11.61")	19.5 (0.77")

Motor drive

VFPS1 4185PL WP

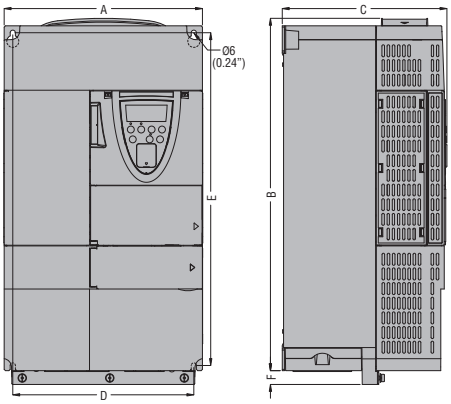

Fig. 1

VFPS1 4220PL WP - VFPS1 4370PL WP

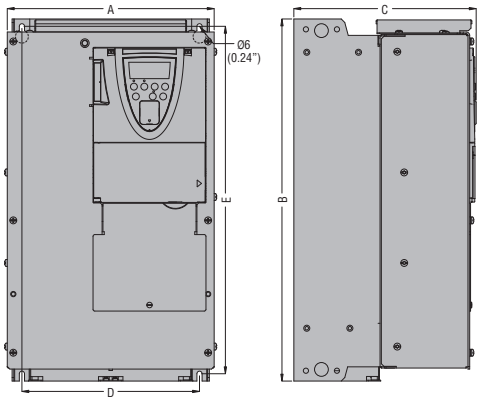

Fig. 2

VFPS1 4450PL WP - VFPS1 4750PL WP

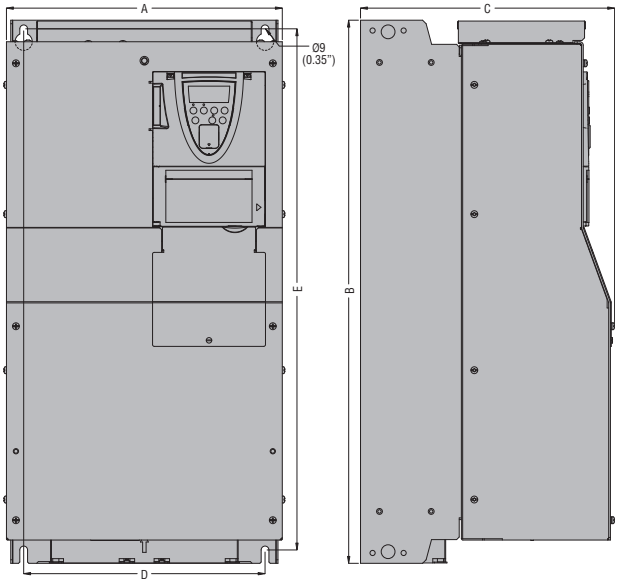

Fig. 3

VFPS1 4900PC WP
VFPS1 4110KPC WP - VFPS1 4630KPC WP

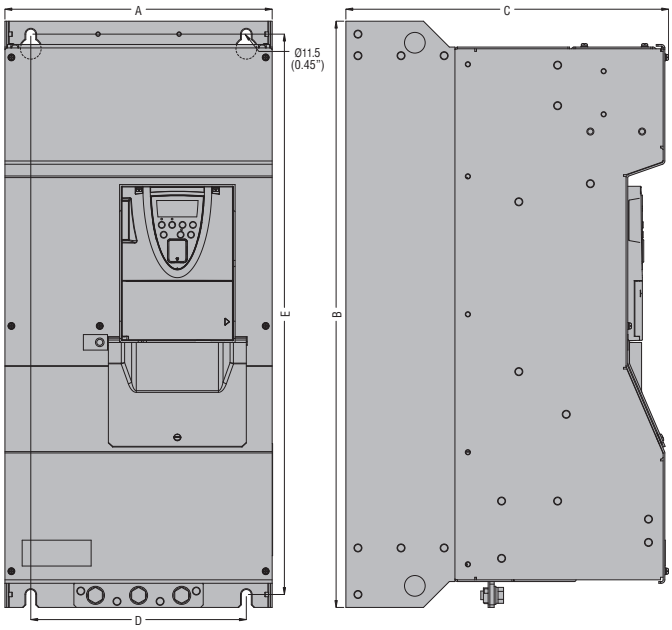

Fig. 4

TYPE	Fig.	A	B	C	D	E	F
VFPS1 4185PL WP	1	230 (9.05")	409 (16.10")	191 (7.52")	210 (8.27")	386 (15.20")	16 (0.63")
VFPS1 4220PL WP	2	240 (9.45")	420 (16.53")	212 (8.35")	206 (8.11")	403 (15.87")	—
VFPS1 4300PL WP	2	240 (9.45")	550 (21.65")	242 (9.53")	206 (8.11")	529 (20.83")	—
VFPS1 4370PL WP	2	240 (9.45")	550 (21.65")	242 (9.53")	206 (8.11")	529 (20.83")	—
VFPS1 4450PL WP	3	320 (12.60")	630 (24.80")	290 (11.42")	280 (11.02")	605 (23.82")	—
VFPS1 4550PL WP	3	320 (12.60")	630 (24.80")	290 (11.42")	280 (11.02")	605 (23.82")	—
VFPS1 4750PL WP	3	320 (12.60")	630 (24.80")	290 (11.42")	280 (11.02")	605 (23.82")	—
VFPS1 4900PC WP	4	310 (12.20")	680 (26.77")	375 (14.76")	250 (9.84")	650 (25.59")	—
VFPS1 4110KPC WP	4	310 (12.20")	680 (26.77")	375 (14.76")	250 (9.84")	650 (25.59")	—
VFPS1 4132KPC WP	4	350 (13.78")	782 (30.79")	375 (14.76")	298 (11.73")	758 (29.84")	—
VFPS1 4160KPC WP	4	330 (12.99")	950 (37.40")	377 (14.84")	285 (11.22")	920 (36.22")	—
VFPS1 4220KPC WP	4	430 (16.93")	950 (37.40")	377 (14.84")	350 (13.78")	920 (36.22")	—
VFPS1 4250KPC WP	4	585 (23.03")	950 (37.40")	377 (14.84")	540 (21.26")	920 (36.22")	—
VFPS1 4280KPC WP	4	585 (23.03")	950 (37.40")	377 (14.84")	540 (21.26")	920 (36.22")	—
VFPS1 4315KPC WP	4	585 (23.03")	950 (37.40")	377 (14.84")	540 (21.26")	920 (36.22")	—
VFPS1 4400KPC WP	4	880 (34.64")	1150 (45.27")	377 (14.84")	831 (32.71")	1120 (44.09")	—
VFPS1 4500KPC WP	4	880 (34.64")	1150 (45.27")	377 (14.84")	831 (32.71")	1120 (44.09")	—
VFPS1 4630KPC WP	4	1108 (43.62")	1150 (45.27")	377 (14.84")	1065 (41.93")	1120 (44.09")	—